NAVIS NavAP
Heading Control System

Introduction

Navis Engineering, established in 1992, is a recognized expert in ship automation systems and one of the few world experts in dynamic positioning technology. After more than 25 years of scrupulous research and development, we have cultivated a profound understanding of every customer's needs, as well as of market trends in shipbuilding. Our company's mission is to keep our systems as simple and user-friendly as possible, and, at the same time, to preserve the high level of quality and reliability.

Navis Engineering manufactures the new generation of autopilots – NavAP Heading Control System. A modern and technologically advanced digital heading control unit intended to reduce the operator's workload, increase the vessel motion efficiency and improve operational safety.

The NavAP autopilot is a result of substantially redesign. The front panel has been modernized and configured as a 5 or 7 inch high-resolution IPS matrix based display. The widest viewing angles among modern displays allow seeing the displayed information regardless of the angle of view comfortably in any light, including the bright sun. Starting from IP44 to IP67 protection level makes NavAP suitable for outdoor installations (at fly bridge or port/ starboard wings).

The NavAP is type approved by DNV (MED-B certificate) and complained to Regulation (EU) 2018/773 (MED/4.16 and MED/4.40).

System overview

The NavAP is fully adaptive. The use of only one 'Sensitivity' parameter for fine-tuning system performance covers all known yawing, steering and counter rudder settings of the autopilots of other brands.
The NavAP has built-in 'Heading Monitor System'(HMS) functionality, which makes it possible to receive and monitor the data coming from two heading data sources continuously (gyro+gyro, gyro+magnetic compass, atellite gyro etc.). Several speed sources can also be used during operation (GPS, waterspeed log or bottom tracking log).

The NavAP fully self-adjusting 'Auto Tune' algorithm allows easily adapting the autopilot performance to the hydrodynamic parameters of any vessel, irrespective of its displacement and dimensions. This makes it possible to use the NavAP onboard any commercial or leisure vessel with a single rudder, linked rudder, independent rudder or stern azimuth Z-drives configuration.

• Wide range of operating modes allows installing NavAP on a broad range of vessels easily, ranging from small boats and yachts to tanker or an atomic icebreaker.
• NavAP is easily compatible with almost all modern steering systems.
• NavAP supports up to two independent tunnel thrusters allows the use of autopilot from zero speeds, which is widely used on special vessels, tugboats and super-yachts.
• The NavAP is one of the few autopilots designed for vessels with two and more independent rudders.
• Full support for modern protocols makes it easy to include NavAP in integrated bridge systems with support for central alert management system (BAM, CAMS).
• Advanced diagnostic utilities make it easy to commission installed autopilots. The auto tune procedure will always determine the maneuverability of the vessel itself and save the optimal control parameters in the non-volatile memory.

Operation modes

Auto

The NavAP automatically keeps the set heading on high and low speeds. The low-speed heading mode can be used by means of 1 or 2 thrusters connected to the NavAP.

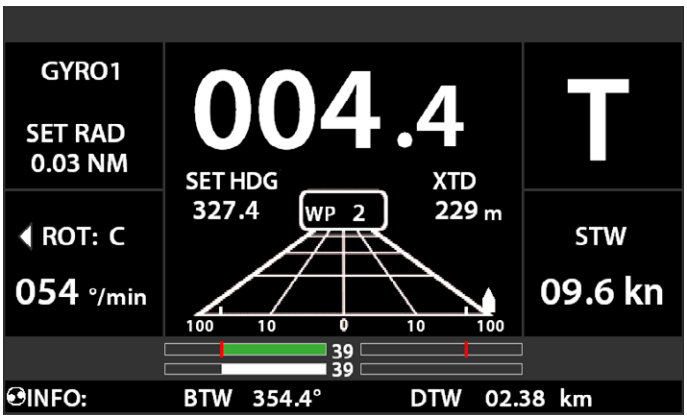

Track

The NavAP controls vessel motion on straight legs between track points set from chart system.

FU

Follow-up manual control of the steering systems using the rotary knob on the control panel or via an external FU lever/wheel.

CTS Pilot

The NavAP automatically keeps the set course (COG).

River Pilot

Manual Rate of Turn (ROT) control using the rotary knob on the control panel or via an external ROT tiller.

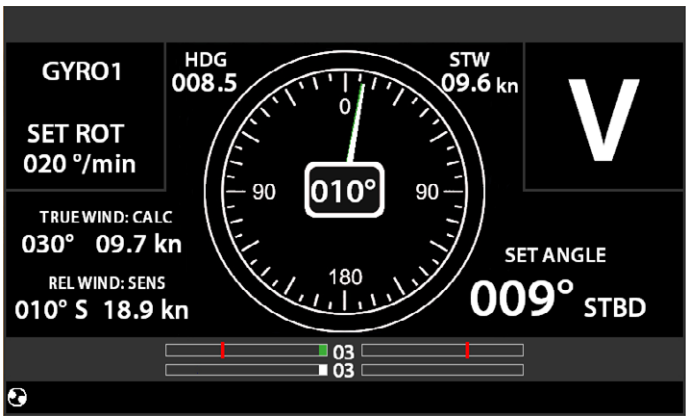

Wind Vane (option for sailing boats)

The NavAP automatically keeps the set heading according to wind angle.

APH-7 Mass 1.8 kg, 15 W

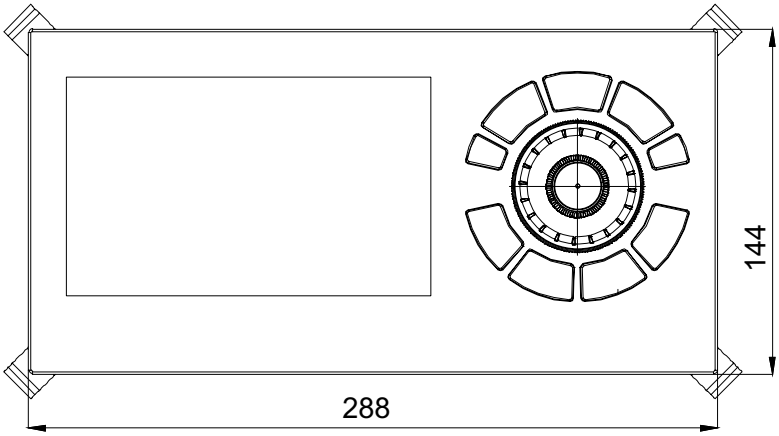

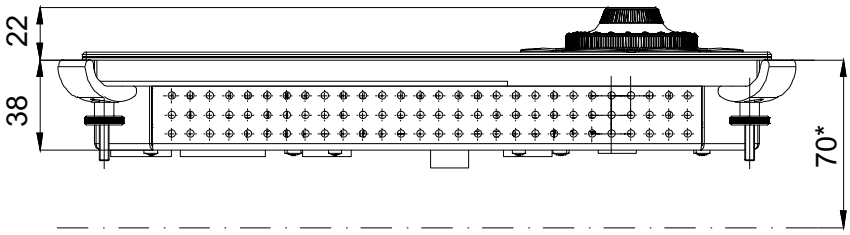

APH-5 Mass 1.0 kg, 10 W

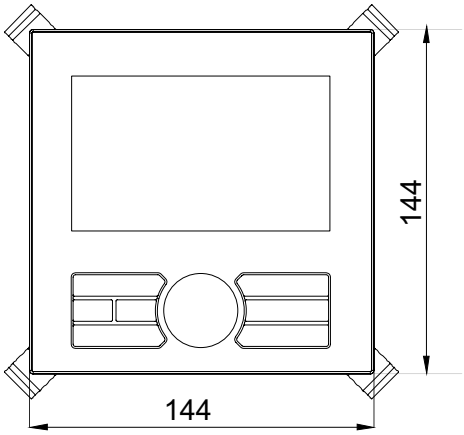

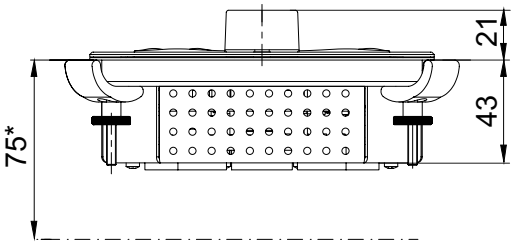

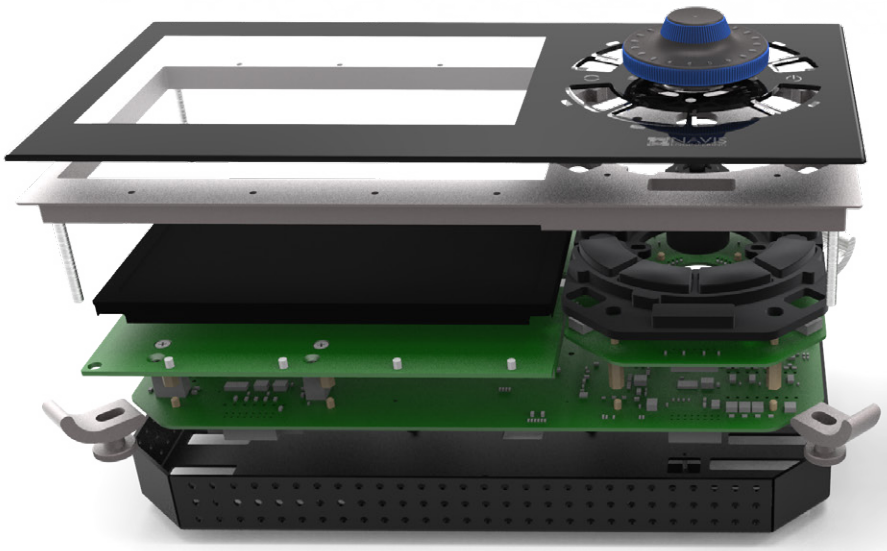

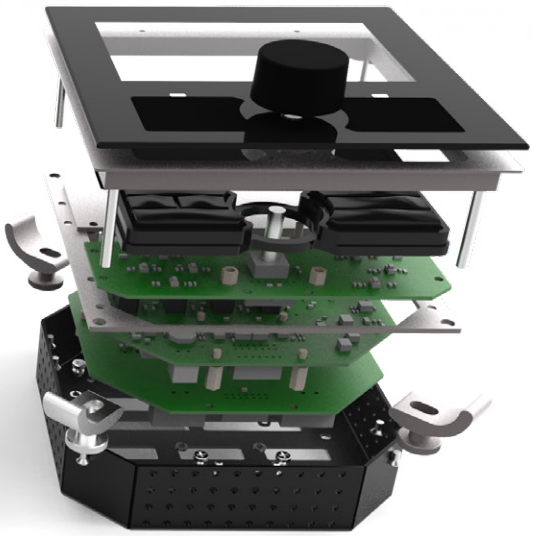

System configuration

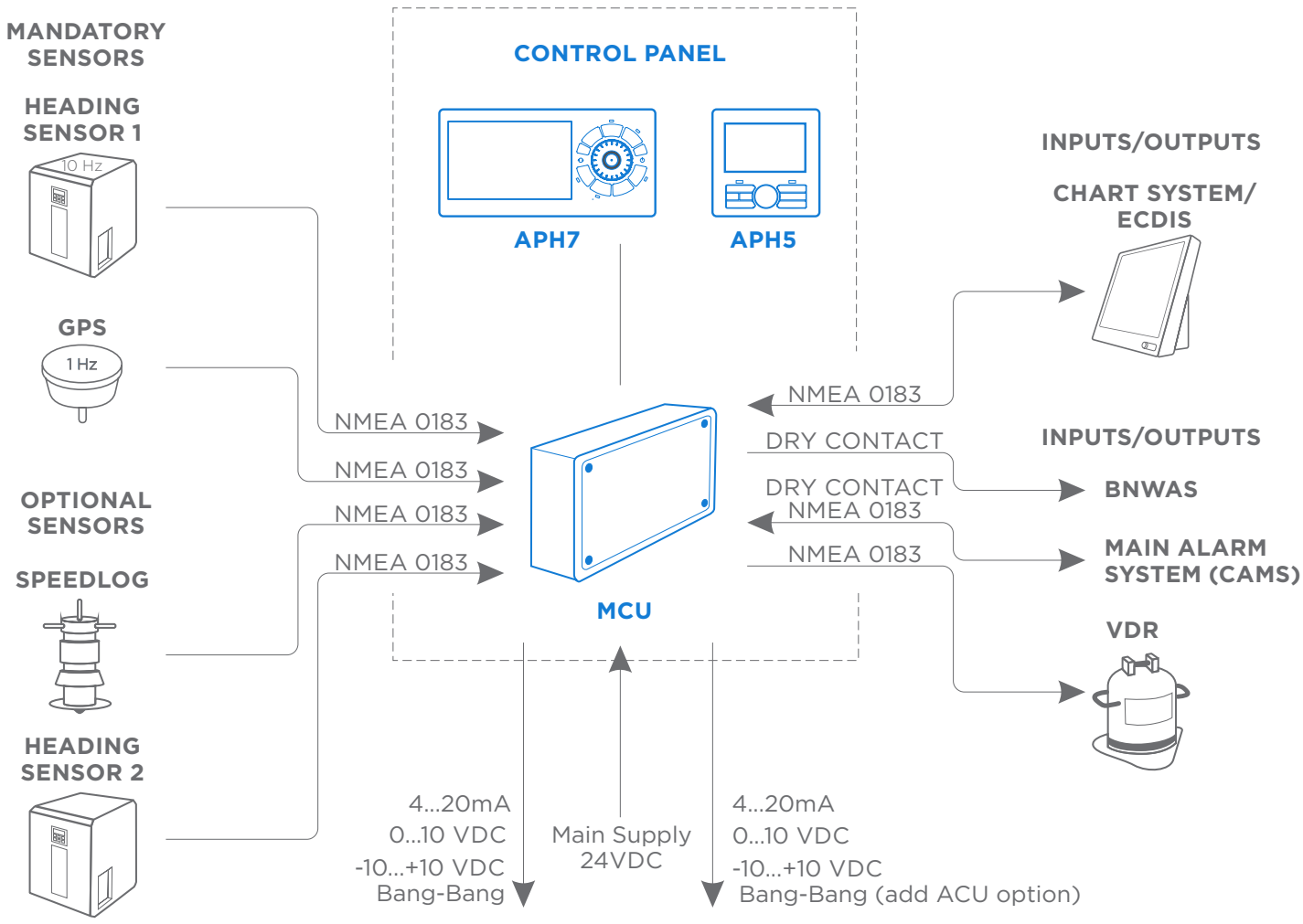

Standard NavAP autopilot

NavAP configuration can be extended:
- Up to five control panels (central bridge,fly bridge, port/stbd wing, aft bridge);
- With steering gear control levers and/or steering wheel.

Technical specifications

Electrical parameters	
Supply voltage	24 VDC (18-36 VDC)
Power consumption	Approx.25 W (The total power consumption depends on the configuration.)
Signal inputs	
Gyro compass Satellite compass	NMEA telegrams HDT, THS
Magnetic compass	NMEA telegrams HDT, HDG, THS
Speed log	NMEA telegrams VTG, VHW, VBW

For TRACK mode	NMEA telegram APB, BWC/BWR, HTC, HSC, Propr
GPS/GNSS	VTG, GLL, GGA, ZDA
Signal outputs	
VDR connection	NMEA telegrams HTD, RSA, ROR, ALR, ALA,HMS, HMR
CAMS, BAM	NMEA telegrams ALF, ALC, ACN, ARC, HBT for communication with CAMS, BAM
Control of steering gear/tunnel thruster	
2 switching outputs	24V DC, max. 70W
2 analog outputs 2 analog outputs for Danfoss valves	+/- 10 V DC, 0…10 V, or 4 – 20 mA 6…18 V
analog output for tunnel thruster	+/- 10 V DC, 0…10 V, max. 5 mA, or 4 – 20 mA
Actual rudder from steering gear	0…10V, 4-20mA, potentiometer
Status/alerts	– Off-heading – Heading monitor – Autopilot on – System alert – System failure –User activity – Alert communication acc. to IEC 61162-1 or IEC 61924-2 – NMEA telegrams ALF, ALC, ACN, ARC, HBT
Type of enclosure acc. to IEC 60529	
APH-7/APH-5 operator unit	IP22 / IP56 (front side)
MCU interface unit	IP 22/ IP 44 (Option with cable glands)
RFU rudder feedback unit	IP56
Temperature range	
Operation	-15°C to + 55°C
Storage	-40°C to + 70°C

All parameters are in compliance with following standards:
– ISO 11674, ISO 16329
– NMEA according to IEC 61162-1, IEC 61162-2
– IEC 60945
– IEC 62288
– A.342(IX), A.694(17), MSC.64(67) Annex 3, A.822(19)

For details see approval certificates.

Headoffice
Navis Engineering Oy, Tuupakantie 3A, FI 01740 Vantaa, Finland
Tel:+358 9 250 9011 Fax:+358 9 250 9012

navisincontrol.com, sales@navisincontrol.com